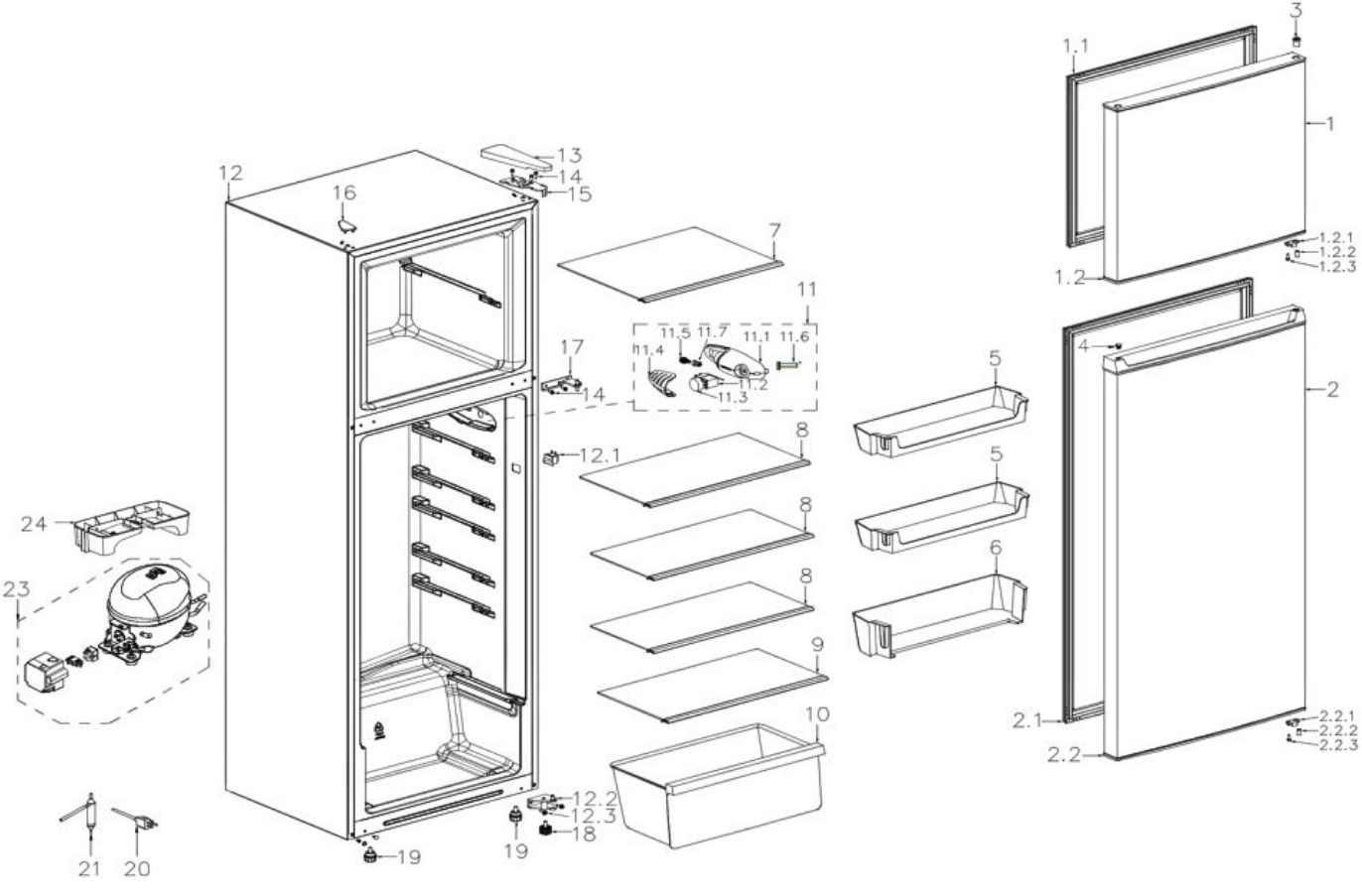
1
1.1
1.2
1.2.1
1.2.2
1.2.3
2
2.1
2.2
2.2.1
2.2.2
2.2.3
3
4
5
5
6
7
8
8
8
9
10
11
11.1
11.2
11.3
11.4
11.5
11.6
11.7
12
12.1
12.2
12.3
13
14
14
15
16
17
18
19
19
20
21
23
24